SX82

TYPICAL APPLICATIONS	Coffee machines, refrigerators, ironing steam generators, medical appliances, vacuum cleaners, power inlet
FUNCTIONS	■ SPST, illuminated or not ■ DPST, momentary or not ■ DPST, illuminated or not ■ DPCO ■ DPDT
CYCLE No.	50.000
CUT OUT	30x22 mm
AMBIENT TEMPERATURE	125 °C
GWT	850 °C
GWT NO FLAME (<2sec)	750 °C on demand

S X 8 2 ? **?**

WATERPROOF CAP

DRAWING

1

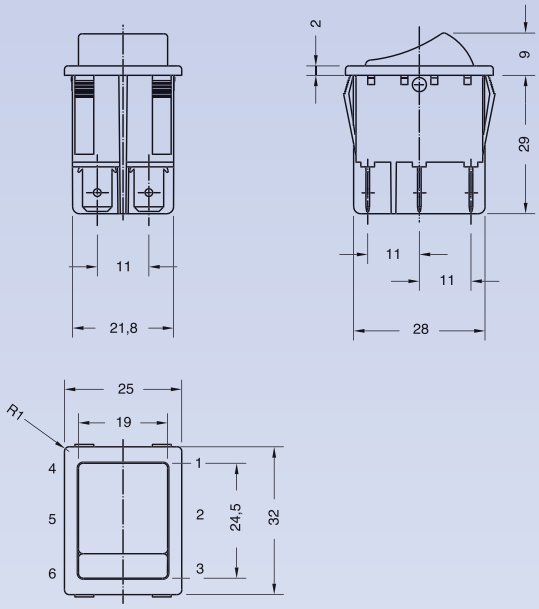

3

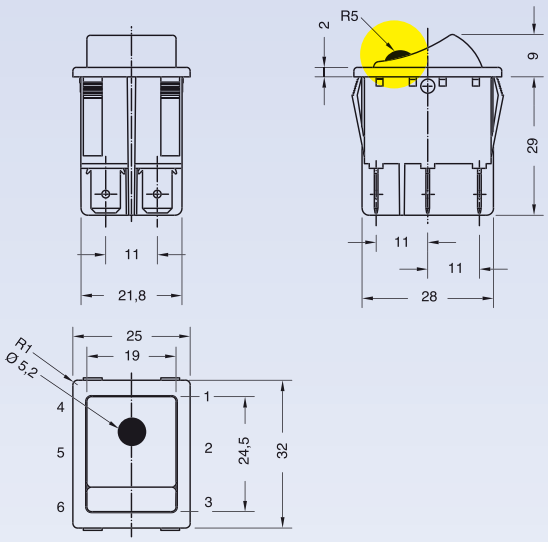

C Waterproof cap mounted

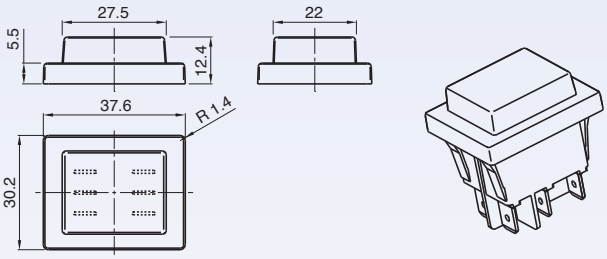

TERMINAL

1

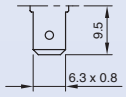

2

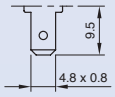

4

N. 4 screw terminals

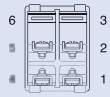

5

N. 2 screw terminals
N. 2 6.3x0.8 terminals

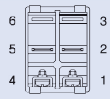

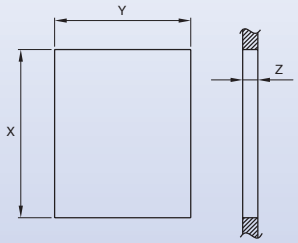

		Z	Y		X	
STANDARD	PLASTIC	0,7 ... 3,5	22	±0,1	30	+0,2 / 0
WATERPROOF CAP VERSION	METAL	0,7 ... 2,5	22	±0,1	30,2	+0,2 / 0

				DRAWING	TERMINAL	FUNCTION	RATING	BODY COLOUR	ROCKER COLOUR	MARKING COLOUR	MARKING	LENS COLOUR			
S	X	8	2										0	0	0

? FUNCTION

1 Terminal 1 - 2

2

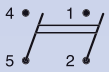

7 Terminal 1

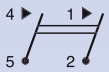

8

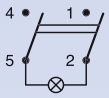

9 Terminal 1

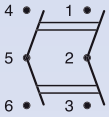

L Terminal 1

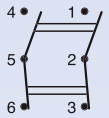

W Terminal 1

? RATING

8

Function 1 - 2
20 (2) A / 250 VAC *
16 (8) A / 250 VAC
10 (6) A / 250 VAC - 5E4
T125/55 °C
EN 61058

20 A / 125 VAC
16 A / 250 VAC
3/4 HP - 125 / 250 VAC
T105 °C
UL 1054

Function 7 - L
16 (6) A / 250 VAC
10 (4) A / 400 VAC
10 (4) A / 250 VAC - 5E4
T125/55 °C
EN 61058

20 A / 125 VAC
16 A / 250 VAC
3/4 HP - 125 / 250 VAC
T105 °C
UL 1054

Function 8 - W
20 (2) A / 250 VAC *
16 (8) A / 250 VAC
10 (6) A / 250 VAC - 5E4
T125/55 °C
EN 61058

20 A / 125 VAC
16 A / 250 VAC
3/4 HP - 125 / 250 VAC
T105 °C
UL 1054

Function 9
16 (6) A / 250 VAC
10 (4) A / 250 VAC - 5E4
T125/55 °C
EN 61058

16 A / 125 VAC
16 A / 250 VAC
3/4 HP - 125 / 250 VAC
T105 °C
UL 1054

B

Function 8 - W
20 (2) A / 250 VAC *
16 (8) A / 250 VAC
10 (6) A / 250 VAC - 5E4
T125/55 °C
EN 61058

16 A / 250 VAC
3/4 HP - 250 VAC
T105 °C
UL 1054

* Not available for terminal 2

? BODY COLOUR

1 black

2 white

X ? custom

? ROCKER COLOUR

1 black

2 white

ILLUMINATED

G red

H orange

E green

L white

F blue

X ? custom

? MARKING COLOUR

1 black

2 white

0 none

X ? custom

? MARKING

1

2

6

9

A

C

D

N

0

X

? 0 0 0 LENS COLOUR

0 none

ILLUMINATED

G red

H orange

E green

X ? custom